C09 90 DEGREE “L” SHAPE GRAB BAR 16” X 32”

Gallery™
specialty hardware ltd.

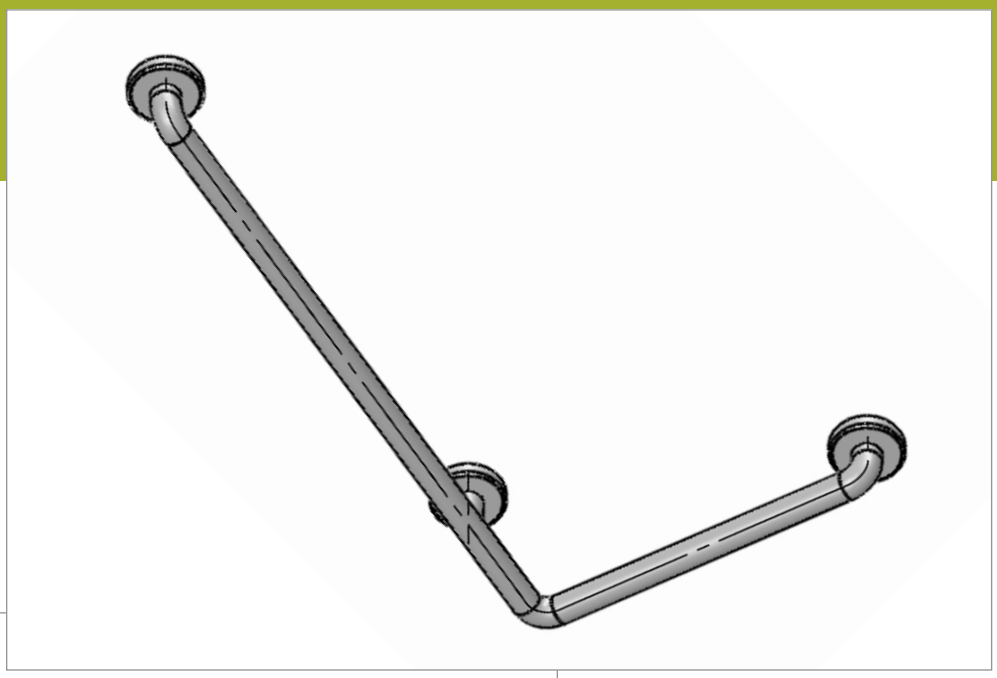

GallerySpecialty.com

1.800.267.1236

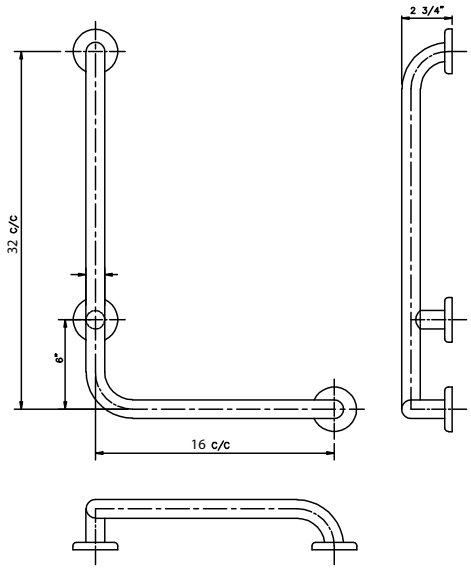

676 Petrolia Road, Toronto, ON, Canada M3J 2V2
Tel: 416.667.9593 Fax: 416.667.0806
Email: info@galleryspecialty.com

All product specifications are subject to change. For the most updated product features, contact our customer service department Toll Free at 1.800.267.1236

©2019 Gallery Specialty Hardware Ltd.